DWG NO 5007703 SHEET 1 OF 1

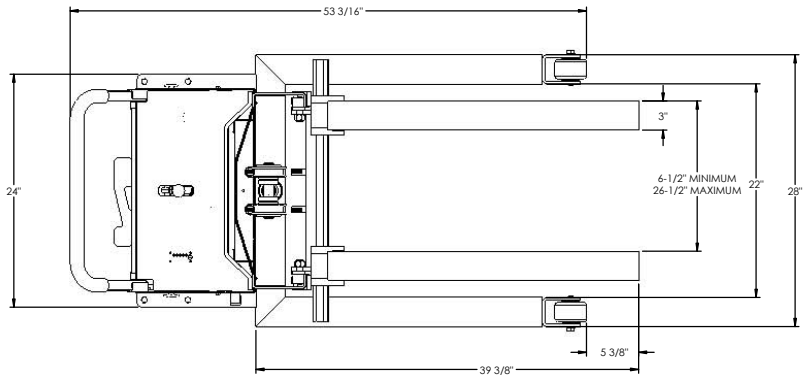

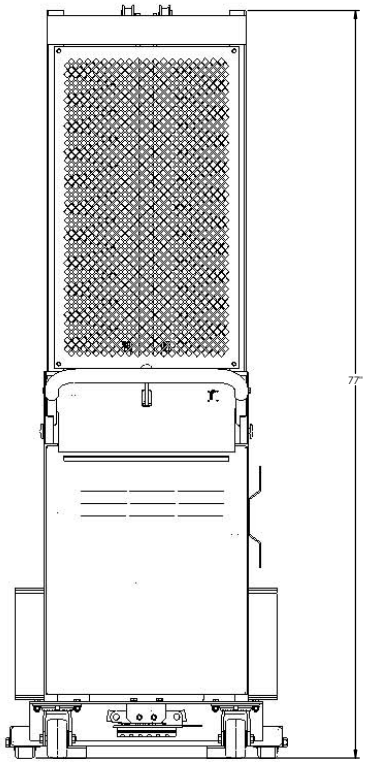

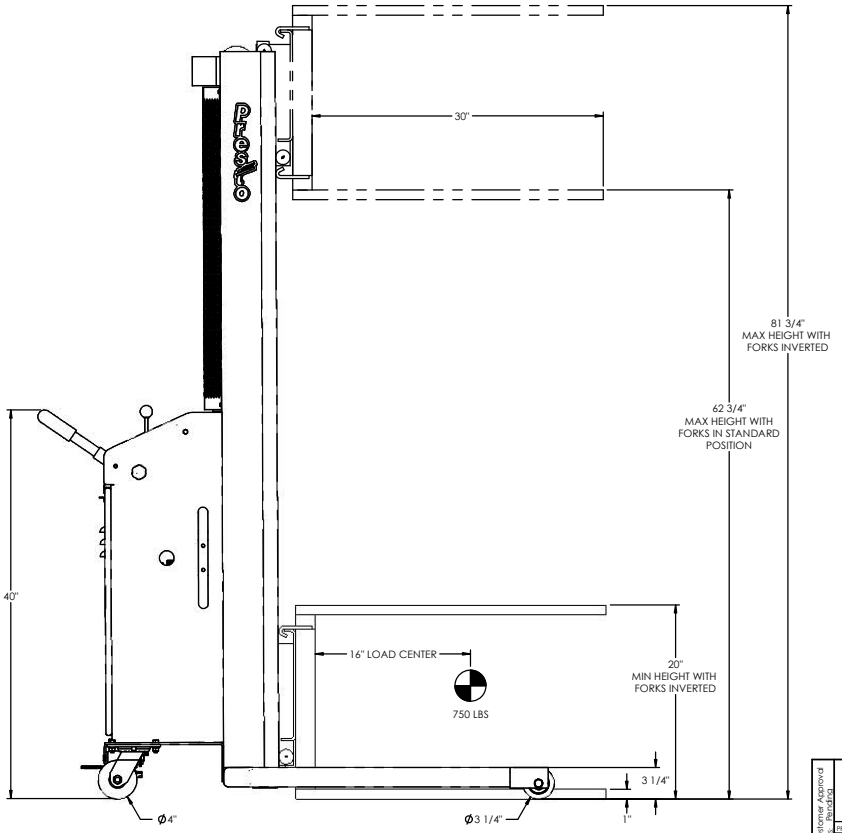

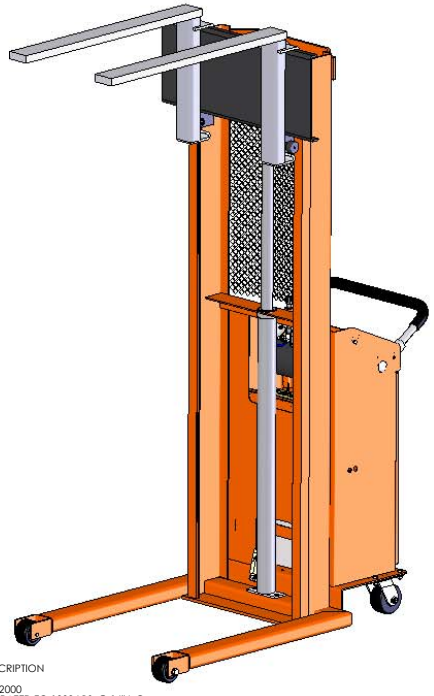

GENERAL DESCRIPTION

MODEL: B666-2000
CAPACITY: DERATED TO 1000 LBS. @ 16" L.C.
RISE: 61 3/4 IN @ 12 SEC (APPROX.)
POWER: 12VDC
CONTROLS: HANDVALVE
FINISH: PRESTO ORANGE MACHINERY ENAMEL
MODIFICATION 1: WIDENED BASE LEGS TO 22" I.D.
MODIFICATION 2: LOW PROFILE BASE FOR 3.25" LOAD WHEELS
MODIFICATION 3: 30" LONG REVERSIBLE FORKS
MODIFICATION 5: MAST CUT DOWN FOR 77" OVERALL HEIGHT

Customer Approval
Date
Drawing

3RD ANGLE PROJECTION

FRACTIONS ± 1/8
.XXX ± .005
.XX ± .01
ANGLES: ± 5°

UNLESS OTHERWISE SPECIFIED: DIMENSIONS ARE IN INCHES

PROJECT: V62470

USE OF PROPRIETARY INFORMATION LIMITED TO WRITTEN AGREEMENT